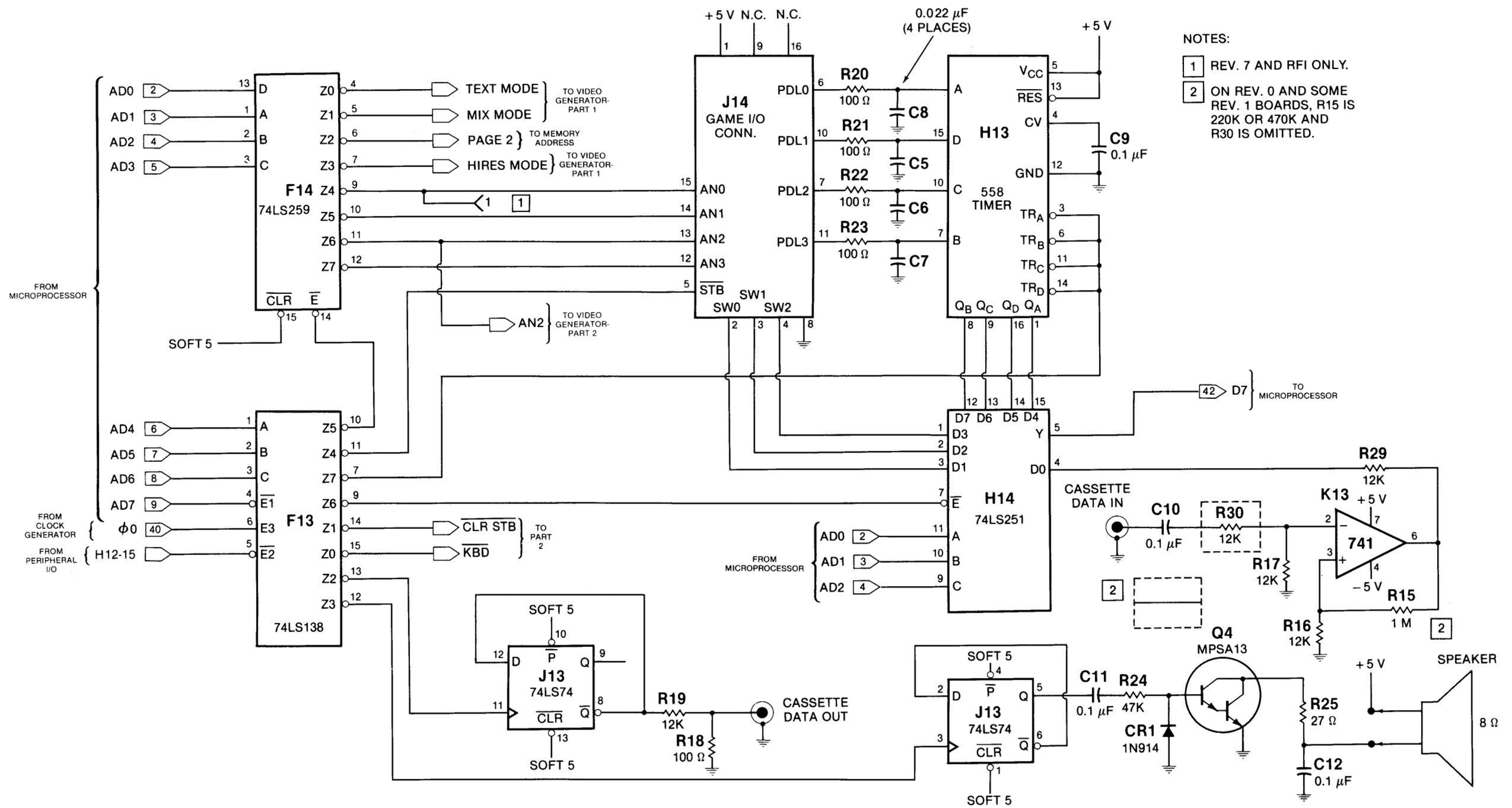

Fig. C-12. On-board I/O—part 1 (all revisions).