AN 11.19

Migrating the USB97CFDC to the USB97CFDC2

Preface

Application note for migrating a USB97CFDC based design to an updated design using the USB97CFDC2.

1 Audience

This application note assumes that the reader is familiar with hardware design, USB protocols and Floppy Drives.

2 Overview

This application note discusses the migration of a USB Floppy Disk Drive design using the SMSC USB97CFDC to the new SMSC USB97CFDC2. The new USB97CFDC2 improves on the USB97CFDC with additional features to give greater flexibility and lower total BOM cost. The footprint for USB97CFDC2 is identical to USB97CFDC in a 100-pin TQFP (12mm x 12mm).

3 Feature Comparison

The major difference between the USB97CFDC and the USB97CFDC2, is that the USB97CFDC requires an external flash ROM for code execution of the internal 8051 microprocessor. The part can address up to 32KBytes of code ROM. The supplied firmware requires only 16KBytes. Customer configuration information is embedded within that flash ROM. The USB97CFDC2 has an internal 32 KByte masked ROM for code execution. To support customer configurations, an external Serial EEPROM (512X8) is used. For backwards compatibility, the USB97CFDC2 can optionally use an external Flash ROM.

In general, when moving to a USB97CFDC2 design from a USB97CFDC design, remove the flash ROM and add a Serial EEPROM.

Table 3.1 Feature Comparison Between USB97CFDC and USB97CFDC2

FEATURE	USB97CFDC	USB97CFDC2
External Flash ROM interface	Yes	Yes
External Serial EEPROM interface	No	Yes
Internal 32K masked ROM	No	Yes

4 Design Considerations

There are four areas to consider while migrating a USB97CFDC design to USB97CFDC2. They are pin definitions, ROM, configuration programming, and software. Each of the design considerations is discussed in more detail in the following sections.

5 Pin Definition Differences

5.1 Flash ROM / Serial EEPROM Pin Differences

The USB97CFDC has an external flash ROM interface. The USB97CFDC2 can interface to either an external flash ROM or to a Serial EEPROM. The selection is made through the ROMEN pin described later.

If using an external flash ROM, the ROM interface between the USB97CFDC and USB97CFDC2 is identical, so no change is required.

If using a Serial EEPROM, the FD[7:0] pins are connected differently, as listed in Table 5.1. All other flash interface signals are left as no-connects.

Table 5.1 Flash ROM/Serial EEPROM Pin Differences Between USB97CFDC and USB97CFDC2

USB97CFDC			USB97CFDC2		
FLASH ROM INTERFACE (8 PINS)			FLASH ROM INTERFACE (8 PINS)		SERIAL EEPROM INTERFACE
PIN #	PIN NAME	FUNCTION	PIN NAME	FUNCTION #1 *	FUNCTION #2 **
38	FD0	flash ROM data line 0	FD0/OPT0	flash ROM data line 0	Pull down if using Serial EEPROM
37	FD1	flash ROM data line 1	FD1/OPT1	flash ROM data line 1	Pull down if using Serial EEPROM
36	FD2	flash ROM data line 2	FD2/OPT2	flash ROM data line 2	Pull down if using Serial EEPROM
35	FD3	flash ROM data line 3	FD3/OPT3	flash ROM data line 3	Pull high to enable Serial EEPROM
34	FD4	flash ROM data line 4	FD4/IN	flash ROM data line 4	DO of Serial EEPROM
33	FD5	flash ROM data line 5	FD5/OUT0	flash ROM data line 5	CLK of Serial EEPROM
32	FD6	flash ROM data line 6	FD6/OUT1	flash ROM data line 6	DI of Serial EEPROM
31	FD7	flash ROM data line 7	FD7/OUT2	flash ROM data line 7	CS of Serial EEPROM

5.2 SRAM Interface Differences

The USB97CFDC supports an interface for an optional external SRAM. This interface is not used for normal operation. All SRAM pins should be left unconnected. In the case of the USB97CFDC2, all pins in the SRAM interface are no-connect pins. The detailed description is listed in Table 5.2.

In both applications, these pins should not be used, so there should be no changes associated with the migration.

Table 5.2 Summary Pin Differences Between USB97CFDC and USB97CFDC2

USB97CFDC			SB97CFDC2	
SRAM INTERFACE (25 PINS)				
PIN #	**PIN NAME**	**FUNCTION**	**PIN NAME**	**FUNCTION**
84~87, 89~92	SD7~0	SRAM data lines	NC	No function
13, 99,100, 1~7, 9~12	SA13~ SA0	SRAM address lines	NC	No function
97	nMEMR	SRAM memory read	NC	No function
98	nMEMW	SRAM memory write	NC	No function
23	nMEMEN	SRAM memory chip select	NC	No function

5.3 Miscellaneous Pin Differences

There are two additional two pins that are different between the USB97CFDC and USB97CFDC2. They are pin 20 and pin 24. The differences are listed in Table 5.3.

Pin 20, ROMEN, is a new function added to the USB97CFDC2. When this pin is pulled up or left unconnected, the internal masked ROM is selected. If tied to ground, the external flash ROM is selected. Use of this pin is described in the next section in detail.

The function of pin 24, has been changed to HDO (High Density Output). Pin 4 of the Floppy Disk Drive connector must be pulled up with a 1.0K resistor to VDD of the floppy drive. Pin 24 of USB97CFDC2 must be connected to the HDO pin on the floppy disk connector.

Table 5.3 Summary Pin Differences Between USB97CFDC and USB97CFDC2

USB97CFDC			USB97CFDC2	
MISC (2 PINS)				
PIN #	**PIN NAME**	**FUNCTION**	**PIN NAME**	**FUNCTION**
20	NC	No function	ROMEN	If high or floating, enable internal mask ROM If low, use external flash ROM
24	OPTEN	SRAM address line 14	HDO	High Density output from FDD

6 ROM

6.1 USB97CFDC with External Flash ROM

The USB97CFDC requires an external Flash ROM which contains the firmware that is executed by the 8051 microprocessor embedded in the USB97CFDC.

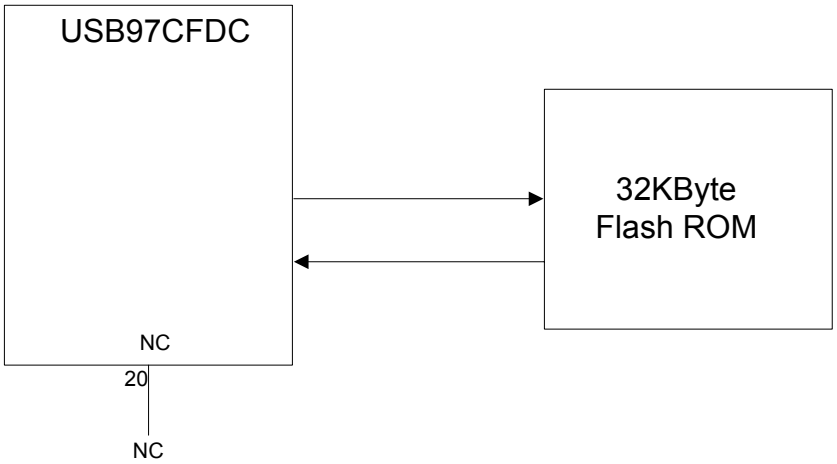

Figure 6.1 Connection of Pin 20 for USB97CFDC

6.2 USB97CFDC2 with Internal Mask ROM and External Serial EEPROM

When using the USB97CFDC2, the external flash ROM can be removed to lower total BOM cost. To use the internal 32K masked ROM of USB97CFDC2, leave pin 20 un-connected. Since pin 20 on the USB97CFDC is a no-connect, no schematic changes are required. The customer configuration is loaded from a serial EEPROM.

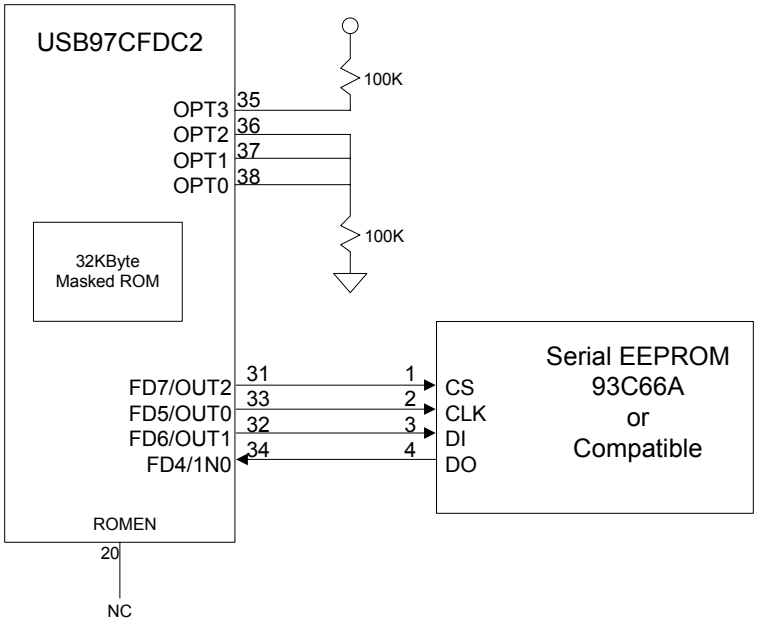

Figure 6.2 USB97CFDC2 Using Internal ROM and External Serial EEPROM

6.3 USB97CFDC2 with External Flash ROM

If the design requires the use of an external Flash ROM with the USB97CFDC2, pin 20, ROMEN, must be tied to ground.

Note: The current revision of the internal ROM code does not pass the HCT11.2 WHQL test suite. If WHQL certification is required, the external flash ROM must be populated with the latest code licensed from SMSC. Contact your local SMSC representative for the latest code.

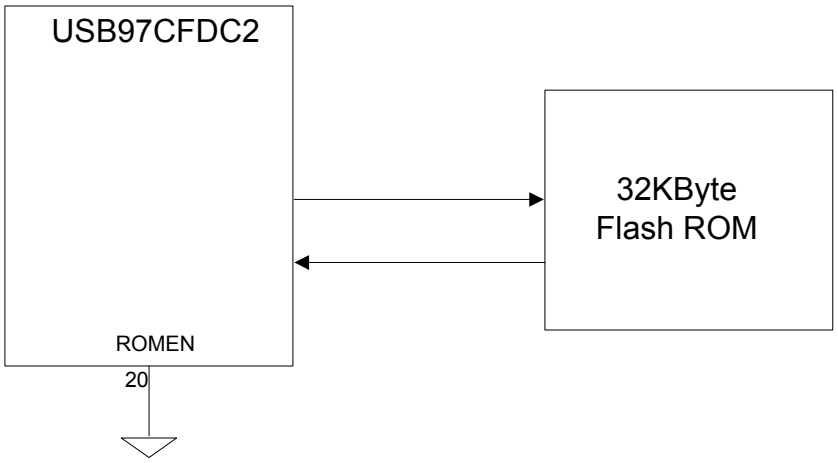

Figure 6.3 Connection of Pin 20 for USB97CFDC2 Using External Flash ROM

7 Configuration Programming

When using the USB97CFDC or USB97CFDC2 with external flash ROM, the ROM needs to be programmed with the customer specific configuration using SMSC's "RomSet.exe" utility. The utility can be used to edit customer configuration information such as device descriptor (VID, PID, etc.), language string, manufacturer string, product string, inquiry data etc. The details are described in the USB97CFDC2 data sheet, and Section 1.21 and Sec. 3 of "firmware guide and release notes". If you require the firmware release package for the USB97CFDC2, please contact your local SMSC representative.

When using an USB97CFDC2 with a serial EEPROM, the customer configuration is edited into the "eeprom.dat" file. The "writeee.exe" DOS utility that is part of SMSC's firmware release package, can be used to program the Serial EEPROM through the USB97CFDC2. The file is written to the 93C66A/AA (512X8). An example of eeprom.dat is described in Appendix A of "firmware guide and release notes".

8 Software

This is the procedure to install the firmware and driver on a prototype USB Floppy Disk Controller module installed with a USB97CFDC2:

1. **Serial EEPROM Programming**

a. Edit eeprom.dat file.

b. Use the "writeee.exe" DOS utility to program the content of eeprom.dat into Serial EEPROM. The USB FDC module must be plugged into a PC with a UHCI host. The utility will not work with an OHCI or EHCI host. Follow the procedure described in Sec 1.21.2.1 of the "firmware guide and release notes".

2. Driver

a. Edit pusbfdsm.inf file that comes with the release package, to match the VIDs and PIDs in the Serial EEPROM. Change the various descriptor strings to match also if desired. There is one pusbfdsm.inf file for Windows XP, 2000 and 98, and different one for Windows Millenium.

b. For Windows 2000 and XP, the driver will be installed when the PC is powered up for the first time with the USB Floppy Disk Controller module plugged in.

c. For Windows 98, the SMSC driver is required. These consist of two files: pusbfd1.sys and pusbfd2.vxd. These file must be installed on the machine. Point to these files when requested by the installation software.

80 Arkay Drive
Hauppauge, NY 11788
(631) 435-6000
FAX (631) 273-3123

Copyright © SMSC 2005. All rights reserved.

Circuit diagrams and other information relating to SMSC products are included as a means of illustrating typical applications. Consequently, complete information sufficient for construction purposes is not necessarily given. Although the information has been checked and is believed to be accurate, no responsibility is assumed for inaccuracies. SMSC reserves the right to make changes to specifications and product descriptions at any time without notice. Contact your local SMSC sales office to obtain the latest specifications before placing your product order. The provision of this information does not convey to the purchaser of the described semiconductor devices any licenses under any patent rights or other intellectual property rights of SMSC or others. All sales are expressly conditional on your agreement to the terms and conditions of the most recently dated version of SMSC's standard Terms of Sale Agreement dated before the date of your order (the "Terms of Sale Agreement"). The product may contain design defects or errors known as anomalies which may cause the product's functions to deviate from published specifications. Anomaly sheets are available upon request. SMSC products are not designed, intended, authorized or warranted for use in any life support or other application where product failure could cause or contribute to personal injury or severe property damage. Any and all such uses without prior written approval of an Officer of SMSC and further testing and/or modification will be fully at the risk of the customer. Copies of this document or other SMSC literature, as well as the Terms of Sale Agreement, may be obtained by visiting SMSC's website at http://www.smsc.com. SMSC is a registered trademark of Standard Microsystems Corporation ("SMSC"). Product names and company names are the trademarks of their respective holders.

SMSC DISCLAIMS AND EXCLUDES ANY AND ALL WARRANTIES, INCLUDING WITHOUT LIMITATION ANY AND ALL IMPLIED WARRANTIES OF MERCHANTABILITY, FITNESS FOR A PARTICULAR PURPOSE, TITLE, AND AGAINST INFRINGEMENT AND THE LIKE, AND ANY AND ALL WARRANTIES ARISING FROM ANY COURSE OF DEALING OR USAGE OF TRADE.

IN NO EVENT SHALL SMSC BE LIABLE FOR ANY DIRECT, INCIDENTAL, INDIRECT, SPECIAL, PUNITIVE, OR CONSEQUENTIAL DAMAGES; OR FOR LOST DATA, PROFITS, SAVINGS OR REVENUES OF ANY KIND; REGARDLESS OF THE FORM OF ACTION, WHETHER BASED ON CONTRACT; TORT; NEGLIGENCE OF SMSC OR OTHERS; STRICT LIABILITY; BREACH OF WARRANTY; OR OTHERWISE; WHETHER OR NOT ANY REMEDY OF BUYER IS HELD TO HAVE FAILED OF ITS ESSENTIAL PURPOSE, AND WHETHER OR NOT SMSC HAS BEEN ADVISED OF THE POSSIBILITY OF SUCH DAMAGES.